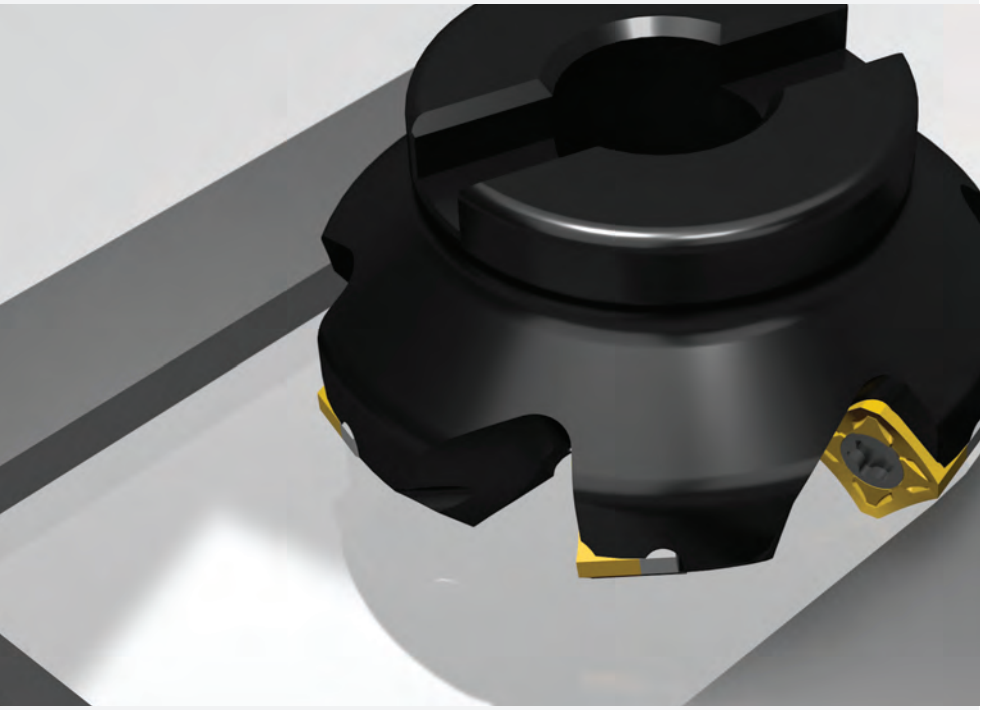

MILLING

Shouldering .199
Facing .209
High Feed .223
Copying .229
Chamfering .237
Advanced .241

MILLING Shouldering

DOUBLE3GON .200
REKPLUS .202
APKT ISO .206

nikkoTOOLS

WNEX

DOUBLE3GON
Shouldering double side

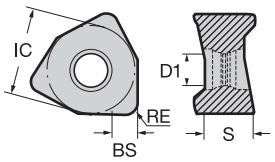

6 edges

Size	IC	S	D1
04	6.70	3.30	3.10
08	12.70	6.45	4.60

ISO513	JP5530 (HC-PVD)	JP5540 (HC-PVD)	JP7525 (HC-PVD)	JP8525 (HC-PVD)	JP9525 (HC-PVD)	JC7515 (HC-CVD)	JC7530 (HC-CVD)	JC8530 (HC-CVD)	JU6520 (HW)
P	60 230	60 220		80 250				100 320	
M	60 150	60 200			70 220				
K			100 240			120 350	100 300		
N									200 1000
S		40 100							
H									

GRADE APPLICATION AREA	Light cut, stable machining	Hardness + / −	Toughness − / +
■ main application	Variable condition, general machining		
■ applicable	Heavy cut, unstable machining		

SHARP	SC P M S	WNEX	080604R-SC	RE 0.4 BS 1.8	a_p ▸ 0.50 **4.00** 7.00 f_z ▸ 0.08 **0.14** 0.20		●		●													
		WNEX	080608R-SC	RE 0.8 BS 1.5	a_p ▸ 1.00 **4.00** 7.00 f_z ▸ 0.10 **0.16** 0.22		●		●													
GENERAL	GP P M K	WNEX	040304R-GP	RE 0.4 BS 0.9	a_p ▸ 0.50 **1.80** 3.00 f_z ▸ 0.06 **0.12** 0.18		▲		●	▽		●	●									
		WNEX	080608R-GP	RE 0.8 BS 1.5	a_p ▸ 1.00 **4.00** 7.00 f_z ▸ 0.14 **0.20** 0.26	▲	●	▲	●	▽	▲	●	●									
REINFORCED	TE P K	WNEX	080608R-TE	RE 0.8 BS 1.5	a_p ▸ 1.00 **4.00** 7.00 f_z ▸ 0.14 **0.22** 0.30	▲	●	▲	●	▽	▲	●	●									
		WNEX	080612R-TE	RE 1.2 BS 1.1	a_p ▸ 1.00 **4.00** 7.00 f_z ▸ 0.14 **0.24** 0.34		●		●			●	●									
ALUMINIUM	AL N 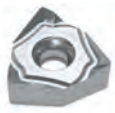 polished surface	WNEX	080608R-AL	RE 0.8 BS 1.4	a_p ▸ 1.00 **4.00** 7.00 f_z ▸ 0.10 **0.17** 0.24									●								

● stock standard, ▲ upcoming introduction, ▽ stock exhaustion

Spare Parts	INSERT SCREW	INSERT WRENCH
NT-WX04H D□□□	NT-ST018	NT-FTB08
NT-WX08H D□□□	NT-ST017	NT-FTB15

CYLINDRICAL

INTERNAL COOLANT

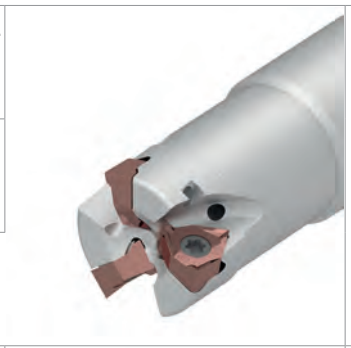

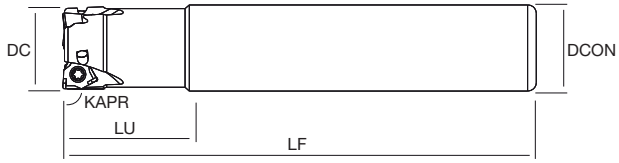

SHOULDERING

90°

P M K N S

SCREW-IN

INTERNAL COOLANT

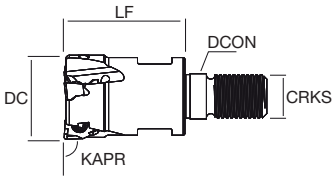

ARBOR

INTERNAL COOLANT

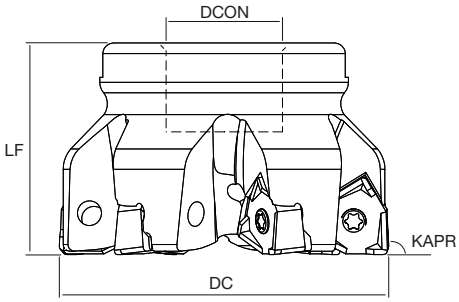

DOUBLE3GON
Shouldering (KAPR 90°)

				DC	Z	DCON	LF	LU	CRKS	KG	MIID
CYLINDRICAL	NT-WX04H	D020-S16-Z3	●	20	3	16	110	20	-	0.30	WNEX04
		D020-S20-Z3	●		3	20	110	28	-	0.30	
		D025-S20-Z4	●	25	4	20	120	22	-	0.50	
		D025-S25-Z4	●		4	25	120	30	-	0.50	
		D032-S25-Z5	●	32	5	25	130	25	-	0.80	
		D032-S32-Z5	●		5	32	130	40	-	0.80	
SCREW-IN	NT-WX04H	D020-M10-Z3	●	20	3	10.5	28	-	M10	0.10	WNEX04
		D025-M12-Z4	●	25	4	12.5	30	-	M12	0.15	
		D032-M16-Z5	●	32	5	17	40	-	M16	0.25	
ARBOR	NT-WX04H	D040-F16-Z7	●	40	7	16	40	-	-	0.25	WNEX04
		D050-F22-Z9	●	50	9	22	40	-	-	0.50	
	NT-WX08H	D050-F22-Z4	●	50	4	22	40	-	-	0.45	WNEX08
		D050-F22-Z5	●		5	22	40	-	-	0.45	
		D063-F22-Z6	●	63	6	22	40	-	-	0.70	
		D063-F27-Z6	●		6	27	40	-	-	0.70	
		D063-F22-Z7	●		7	22	40	-	-	0.80	
		D080-F27-Z7	●	80	7	27	50	-	-	1.00	
		D080-F27-Z9	●		9	27	50	-	-	1.00	
		D100-F32-Z8	●	100	8	32	50	-	-	1.60	
		D100-F32-Z11	●		11	32	50	-	-	1.60	
		D125-F40-Z11	●	125	11	40	63	-	-	2.40	
		D160-F40-Z12	●	160	12	40	63	-	-	4.00	

● stock standard

NT-RKP

REKPLUS
Shouldering - positive

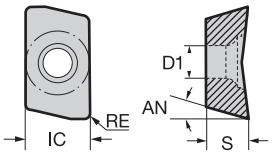

2 edges

Size	IC	S	D1	AN
11	6.35	3.50	2.80	11°
16	9.525	4.76	4.50	11°

ISO513	HC-PVD JP5520	HC-PVD JP5530	HC-PVD JP7615	HC-PVD JP7525	HC-PVD JP8625	HC-PVD JP9535	HC-PVD JP9635	CVD JC7515	HW JU6520	HT JU4525
P	80 250	60 230			80 250					160 350
M	60 160	60 150				60 200	60 200			100 240
K			120 250	100 240				120 350		160 380
N									200 1000	
S						40 100	40 100			
H										

GRADE APPLICATION AREA	
■ main application	Light cut, stable machining
■ applicable	Variable condition, general machining
	Heavy cut, unstable machining

Hardness: − + Toughness: + −

HELICAL TYPE	HSC P M S low cutting force	NT-RKP	11R04M-HSC	RE 0.4	a_p 0.50 **4.50** 8.00 / f_z 0.05 **0.10** 0.15					●		●										
			11R08M-HSC	RE 0.8	a_p 1.00 **4.50** 8.00 / f_z 0.05 **0.10** 0.15					●		●										
			11R12M-HSC	RE 1.2	a_p 1.00 **4.50** 8.00 / f_z 0.05 **0.10** 0.15					●		●										
		NT-RKP	16R08M-HSC	RE 0.8	a_p 1.00 **7.00** 13.00 / f_z 0.08 **0.14** 0.18					●		●										
			16R12M-HSC	RE 1.2	a_p 1.00 **7.00** 13.00 / f_z 0.08 **0.14** 0.18					●		●										
	HGP P M K 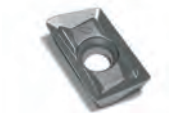 **1st choice**, general purpose	NT-RKP	11R04M-HGP	RE 0.4	a_p 0.50 **4.50** 8.00 / f_z 0.08 **0.14** 0.20					●		●										
			11R08M-HGP	RE 0.8	a_p 1.00 **4.50** 8.00 / f_z 0.08 **0.14** 0.20			●		●		●										
			11R12M-HGP	RE 1.2	a_p 1.00 **4.50** 8.00 / f_z 0.08 **0.14** 0.20					●		●										
			11R16M-HGP	RE 1.6	a_p 1.00 **4.50** 8.00 / f_z 0.08 **0.14** 0.20					●		●										
		NT-RKP	16R08M-HGP	RE 0.8	a_p 1.00 **7.00** 13.00 / f_z 0.10 **0.17** 0.25			●		●		●										
			16R12M-HGP	RE 1.2	a_p 1.00 **7.00** 13.00 / f_z 0.10 **0.17** 0.25					●		●										
			16R16M-HGP	RE 1.6	a_p 1.00 **7.00** 13.00 / f_z 0.10 **0.17** 0.25					●		●										
			16R20M-HGP	RE 2.0	a_p 1.00 **7.00** 13.00 / f_z 0.10 **0.17** 0.25					●		●										
			16R31M-HGP	RE 3.1	a_p 1.00 **7.00** 13.00 / f_z 0.10 **0.17** 0.25					●		●										
STRAIGHT TYPE	SC P M low cutting force	NT-RKP	11R08M-SC	RE 0.8	a_p 1.00 **4.50** 8.00 / f_z 0.05 **0.10** 0.15	▽	▽				▽											
		NT-RKP	16R08M-SC	RE 0.8	a_p 1.00 **7.00** 13.00 / f_z 0.08 **0.14** 0.18	▽					▽											
	GP P M K general purpose	NT-RKP	11R08M-GP	RE 0.8	a_p 1.00 **4.50** 8.00 / f_z 0.08 **0.14** 0.20	●	●		●		●		▽		●							
		NT-RKP	16R08M-GP	RE 0.8	a_p 1.00 **7.00** 13.00 / f_z 0.10 **0.17** 0.25	●	●		○		●		▽		●							
	TE P K reinforced edge	NT-RKP	11R08M-TE	RE 0.8	a_p 1.00 **4.50** 8.00 / f_z 0.10 **0.16** 0.22	●	●		○													
		NT-RKP	16R08M-TE	RE 0.8	a_p 1.00 **7.00** 13.00 / f_z 0.12 **0.20** 0.28	●	●		○													

● stock standard, ○ non-standard stock, ▽ stock exhaustion

NT-RKP

REKPLUS
Shouldering - positive

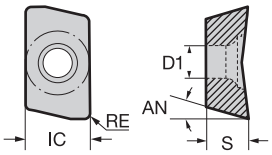

2 edges

Size	IC	S	D1	AN
11	6.35	3.50	2.80	11°
16	9.525	4.76	4.50	11°

ISO513	JP5520 (HC-PVD)	JP5530 (HC-PVD)	JP7615 (HC-PVD)	JP7525 (HC-PVD)	JP8625 (HC-PVD)	JP9535 (HC-PVD)	JP9635 (HC-PVD)	JC7515 (CVD)	JU6520 (HW)	JU4525 (HT)
P	80 250	60 230			80 250					160 350
M	60 160	60 150				60 200	60 200			100 240
K			120 250	100 240				120 350		160 380
N									200 1000	
S						40 100	40 100			
H										

GRADE APPLICATION AREA	Light cut, stable machining	Hardness + / –	Toughness – / +
■ main application	Variable condition, general machining		
■ applicable	Heavy cut, unstable machining		

STRAIGHT TYPE

AL N

polished surface

		RE																				
NT-RKP	**11R04G-AL**	RE 0.4	a_p ▸	0.50	**4.50**	8.00										●						
			f_z ▸	0.10	**0.17**	0.25																
	11R08G-AL	RE 0.8	a_p ▸	1.00	**4.50**	8.00										●						
			f_z ▸	0.10	**0.17**	0.25																
NT-RKP	**16R08G-AL**	RE 0.8	a_p ▸	1.00	**7.00**	13.00										●						
			f_z ▸	0.10	**0.20**	0.30																

● stock standard

CYLINDRICAL

INTERNAL COOLANT

SHOULDERING

90°

P M K N S

SCREW-IN

INTERNAL COOLANT

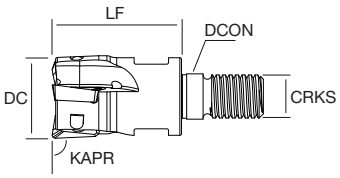

ARBOR

INTERNAL COOLANT

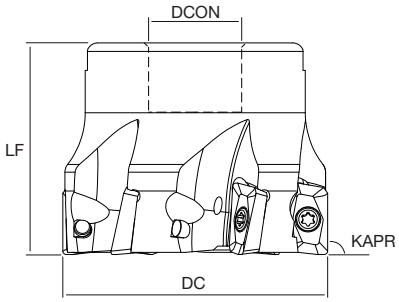

REKPLUS
Shouldering (KAPR 90°)

				DC	Z	DCON	LF	LU	CRKS	KG	MIID
CYLINDRICAL	NT-RKP11	D016-S16-Z2	●	16	2	16	100	25	-	0.15	NT-RKP11
		D020-S16-Z3	●	20	3	16	110	30	-	0.25	
		D020-S20-Z3	●		3	20	110	30	-	0.30	
		D025-S20-Z3	●	25	3	20	120	35	-	0.40	
		D025-S25-Z3	●		3	25	120	35	-	0.50	
		D025-S25-Z4	●		4	25	120	35	-	0.50	
		D032-S25-Z4	●	32	4	25	130	35	-	0.60	
		D032-S32-Z4	●		4	32	130	35	-	1.00	
		D032-S32-Z5	●		5	32	130	35	-	1.00	
	NT-RKP16	D025-S25-Z2	●	25	2	25	120	35	-	0.45	NT-RKP16
		D032-S32-Z3	●	32	3	32	130	45	-	0.75	
		D040-S32-Z4	●	40	4	32	150	45	-	1.00	
CYLINDRICAL LONG	NT-RKP11	D016-S15-Z2-L160	●	16	2	15	160	25	-	0.25	NT-RKP11
		D016-S16-Z2-L160	●		2	16	160	25	-	0.30	
		D017-S16-Z2-L170	●	17	2	16	170	25	-	0.35	
		D020-S19-Z3-L200	●	20	3	19	200	30	-	0.50	
		D020-S20-Z3-L200	●		3	20	200	30	-	0.50	
		D021-S20-Z3-L210	●	21	3	20	210	30	-	0.50	
		D025-S24-Z3-L250	●	25	3	24	250	35	-	1.00	
		D025-S25-Z3-L250	●		3	25	250	35	-	1.00	
		D026-S25-Z3-L260	●	26	3	25	260	35	-	1.00	

● stock standard

		REKPLUS Shouldering (KAPR 90°)		DC	Z	DCON	LF	LU	CRKS	KG	MIID
WELDON	NT-RKP11	D016-W16-Z2-L080	●	16	2	16	80	25	-	0.15	NT-RKP11
		D020-W20-Z3-L090	●	20	3	20	90	30	-	0.20	
		D025-W25-Z4-L100	●	25	4	25	100	35	-	0.35	
SCREW-IN	NT-RKP11	D016-M08-Z2	●	16	2	8.5	25	-	M8	0.05	NT-RKP11
		D020-M10-Z2	▽	20	2	10.5	30	-	M10	0.10	
		D020-M10-Z3	●		3	10.5	38	-	M10	0.10	
		D025-M12-Z3	●	25	3	12.5	38	-	M12	0.15	
		D025-M12-Z4	●		4	12.5	38	-	M12	0.15	
		D032-M16-Z4	●	32	4	17	43	-	M16	0.25	
		D032-M16-Z5	●		5	17	43	-	M16	0.25	
	NT-RKP16	D025-M12-Z2	●	25	2	12.5	38	-	M12	0.15	NT-RKP16
		D032-M16-Z3	●	32	3	17	43	-	M16	0.25	
		D040-M16-Z4	●	40	4	17	43	-	M16	0.30	
ARBOR	NT-RKP11	D040-F16-Z5	●	40	5	16	40	-	-	0.25	NT-RKP11
		D040-F16-Z6	●		6	16	40	-	-	0.25	
		D050-F22-Z5	●	50	5	22	40	-	-	0.45	
		D050-F22-Z7	●		7	22	40	-	-	0.45	
		D063-F22-Z6	●	63	6	22	40	-	-	0.65	
		D063-F22-Z8	●		8	22	40	-	-	0.65	
		D080-F27-Z7	●	80	7	27	50	-	-	1.20	
		D080-F27-Z10	●		10	27	50	-	-	1.20	
	NT-RKP16	D040-F16-Z4	●	40	4	16	40	-	-	0.25	NT-RKP16
		D040-F16-Z5	●		5	16	40	-	-	0.25	
		D050-F22-Z4	●	50	4	22	40	-	-	0.50	
		D050-F22-Z5	●		5	22	40	-	-	0.50	
		D063-F22-Z5	●	63	5	22	40	-	-	0.80	
		D063-F22-Z6	●		6	22	40	-	-	0.80	
		D080-F27-Z6	●	80	6	27	50	-	-	1.20	
		D080-F27-Z8	●		8	27	50	-	-	1.20	
		D100-F32-Z7	●	100	7	32	50	-	-	1.70	
		D100-F32-Z9	●		9	32	50	-	-	1.70	

● stock standard, ▽ stock exhaustion

Spare Parts	INSERT SCREW	INSERT WRENCH
NT-RKP11 D□□□	NT-ST018N	NT-FTB08
NT-RKP16 D□□□	NT-ST017N	NT-FTB15

nikkoTOOLS

APKT

ISO
Shouldering - positive

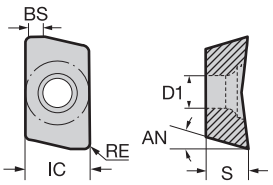

2 edges

Size	IC	S	D1	AN
10	6.70	3.18	2.80	11°
16	9.525	4.76	4.40	11°

ISO513	HC-PVD JP5540	HC-PVD JP8525	HC-PVD JP9525	HC-CVD JC7530	HC-CVD JC8530	HW JU6520
P	60 220	80 250			100 320	
M	60 200		70 220			
K				100 300		
N						200 1000
S	40 100					
H						

GRADE APPLICATION AREA	Light cut, stable machining	Hardness + / Toughness −
■ main application	Variable condition, general machining	
■ applicable	Heavy cut, unstable machining	Hardness − / Toughness +

						JP5540	JP8525	JP9525	JC7530	JC8530	JU6520
GENERAL	GP P M K	APKT	1003PDSR-GP	RE 0.5 BS 0.9	a_p ▸ 1.00 **4.00** 7.00 f_z ▸ 0.08 **0.14** 0.20	●	●		●	●	
		APKT	1604PDSR-GP	RE 1.0 BS 1.9	a_p ▸ 1.00 **7.00** 13.00 f_z ▸ 0.10 **0.17** 0.25	●	●		●	●	
REINFORCED	TE P K	APKT	1003PDSR-TE	RE 0.5 BS 0.9	a_p ▸ 1.00 **4.00** 7.00 f_z ▸ 0.10 **0.16** 0.22	●	●		●	●	
		APKT	1604PDSR-TE	RE 1.0 BS 1.3	a_p ▸ 1.00 **7.00** 13.00 f_z ▸ 0.12 **0.20** 0.28	▲	●	▽	●	●	
ALUMINIUM	AL N polished surface	APKT	1003PDFR-AL	RE 0.5 BS 1.6	a_p ▸ 1.00 **4.00** 7.00 f_z ▸ 0.10 **0.17** 0.25						●
		APKT	1604PDFR-AL	RE 1.0 BS 1.9	a_p ▸ 1.00 **7.00** 13.00 f_z ▸ 0.10 **0.20** 0.30						●

● stock standard, ▲ upcoming introduction, ▽ stock exhaustion

nikkoTOOLS

CYLINDRICAL

INTERNAL COOLANT

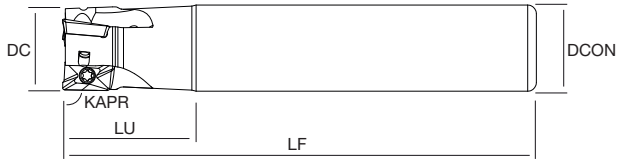

SHOULDERING

90°

P M K N

ARBOR

INTERNAL COOLANT

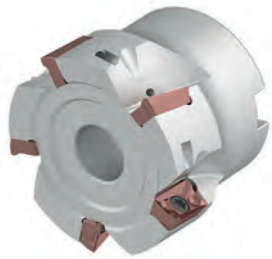

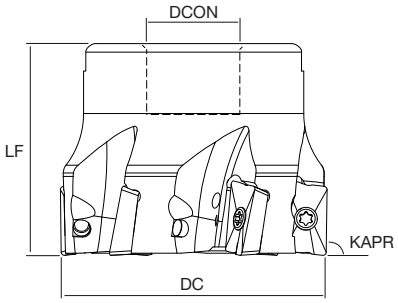

APKT ISO
Shouldering (KAPR 90°)

				DC	Z	DCON	LF	LU	CRKS	KG	MIID
CYLINDRICAL	NT-APK10H	D016-S16-Z2	●	16	2	16	100	28	-	0.15	APKT10
		D020-S20-Z3	●	20	3	20	110	30	-	0.25	
		D025-S25-Z3	●	25	3	25	120	30	-	0.45	
		D032-S32-Z4	●	32	4	32	130	40	-	0.75	
	NT-APK16H	D025-S25-Z2	●	25	2	25	120	40	-	0.45	APKT16
		D032-S32-Z3	●	32	3	32	130	45	-	0.75	
ARBOR	NT-APK10H	D040-F16-Z5	●	40	5	16	40	-	-	0.25	APKT10
		D050-F22-Z5	●	50	5	22	50	-	-	0.45	
		D050-F22-Z7	●		7	22	50	-	-	0.45	
	NT-APK16H	D040-F16-Z4	●	40	4	16	40	-	-	0.25	APKT16
		D050-F22-Z4	●	50	4	22	50	-	-	0.55	
		D050-F22-Z5	●		5	22	50	-	-	0.55	
		D063-F22-Z5	●	63	5	22	40	-	-	0.80	
		D063-F22-Z6	●		6	22	40	-	-	0.80	
		D080-F27-Z6	●	80	6	27	50	-	-	1.20	

● stock standard

Spare Parts	INSERT SCREW	INSERT WRENCH
NT-APK10H D□□□	NT-ST011	NT-FTB09
NT-APK16H D□□□	NT-ST019	NT-FTB15

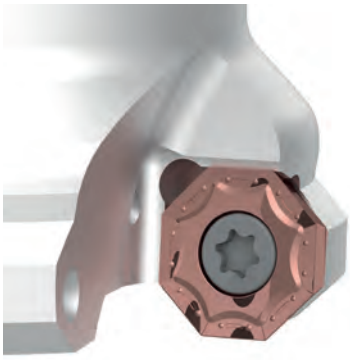

MILLING Facing

DOUBLE4FACE .210
DOUBLEHEX .212
4FACEPLUS .214
OKTOPLUS .218
SEHX12 ISO .222

nikkoTOOLS

SN□X

DOUBLE4FACE

Facing 45° - double sided

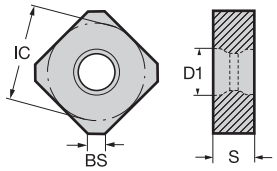

8 edges

Size	IC	S	D1
12	12.70	6.35	5.90

ISO513	JP5520 (HC-PVD)	JP5530 (HC-PVD)	JP7525 (HC-PVD)	JP9535 (HC-PVD)	JC7515 (HC-CVD)	JU6520 (HW)
P	80 250	60 230				
M	60 160	60 150		60 200		
K			100 240		120 350	
N						200 1000
S				40 100		
H						

GRADE APPLICATION AREA	
■ main application	Variable condition, general machining
■ applicable	Heavy cut, unstable machining
	Light cut, stable machining

Hardness: + / –; Toughness: – / +

							JP5520	JP5530	JP7525	JP9535	JC7515	JU6520
SHARP	SC P M S	SNEX	1205ANEN-SC	BS 2.2	a_p ▸ 0.50 **2.00** 3.50 f_z ▸ 0.08 **0.16** 0.24		●	●	●	●	●	
GENERAL	GP P M K	SNEX	1205ANEN-GP	BS 2.2	a_p ▸ 1.00 **2.50** 4.00 f_z ▸ 0.10 **0.23** 0.36		●	●	●	●	●	
		SNMX	1205ANEN-GP	BS 2.2	a_p ▸ 1.00 **2.50** 4.00 f_z ▸ 0.10 **0.23** 0.36		●	●	▲	▲	●	
REINFORCED	TE P K	SNEX	1205ANSN-TE	BS 2.2	a_p ▸ 1.50 **3.00** 4.50 f_z ▸ 0.14 **0.27** 0.40		●	●	●		●	
		SNMX	1205ANSN-TE	BS 2.2	a_p ▸ 1.50 **3.00** 4.50 f_z ▸ 0.14 **0.27** 0.40		●	●	▲		▲	
WIPER	WU P K 2 edges	SNEX	1205-WU	BS 5.6	a_p ▸ 0.50 **1.00** 1.50 f_z ▸ 0.08 **0.16** 0.24		●	●	●		●	
ALUMINIUM	AL N polished surface	SNEX	1205ANFN-AL	BS 2.2	a_p ▸ 0.50 **2.50** 4.50 f_z ▸ 0.10 **0.22** 0.35							●

● stock standard, ▲ upcoming introduction

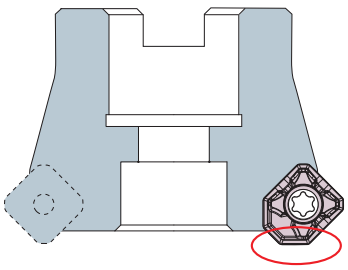

The wiper insert must be mounted face towards the centre of the holder.
Only 1 wiper insert per setup.

nikkoTOOLS

ARBOR

INTERNAL COOLANT

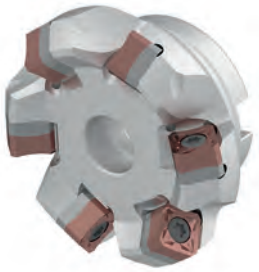

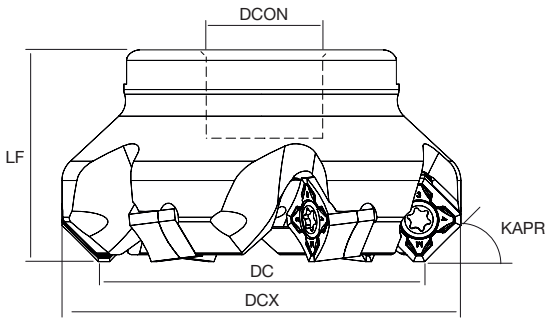

FACING

45°

P M K N S

DOUBLE4FACE
Facing (KAPR 45°)

				DC	DCX	Z	DCON	LF	KG	MIID
ARBOR	NT-SX12H	D050-F22-Z4	●	50	64	4	22	40	0.60	SNEX12 SNMX12
		D050-F22-Z5	●			5	22	40	0.60	
		D063-F22-Z5	●	63	77	5	22	50	0.80	
		D063-F22-Z6	●			6	22	50	0.80	
		D080-F27-Z6	●	80	94	6	27	50	1.40	
		D080-F27-Z7	●			7	27	50	1.40	
		D080-F27-Z8	●			8	27	50	1.40	
		D100-F32-Z7	●	100	114	7	32	50	1.80	
		D100-F32-Z8	●			8	32	50	1.80	
		D100-F32-Z9	●			9	32	50	1.80	
		D125-F40-Z10	●	125	139	10	40	63	3.10	
		D160-F40-Z12	●	160	174	12	40	63	4.60	

● stock standard

Spare Parts	SHIM	SHIM SCREW	SHIM WRENCH	INSERT SCREW	INSERT WRENCH
NT-SX12H D□□□	NT-SH009	NT-SR009	NT-WR040	NT-ST029	NT-FTB15

nikkoTOOLS

HN□□

DOUBLEHEX
Facing 60° - double sided

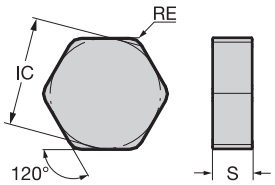

12 edges

Size	IC	S
09	16.20	5.56

ISO513	HC-PVD JP7525	HC-CVD JC7515	CN NSN400	BH NBH550U
P				
M				
K	100 240	120 350	400 1000	800 2000
N				
S				
H				150 300

GRADE APPLICATION AREA	
main application	Variable condition, general machining
applicable	Heavy cut, unstable machining
	Light cut, stable machining

Hardness: + / −; Toughness: − / +

CARBIDE	GL K low cutting force	HNEX	090510-GL	RE 1.0	a_p 0.50 **2.50** 4.50 / f_z 0.08 **0.15** 0.22	●	●															
			090520-GL	RE 2.0	a_p 0.50 **2.50** 4.50 / f_z 0.10 **0.18** 0.26	●	●															
	GG K general purpose	HNEX	090520-GG	RE 2.0	a_p 1.00 **3.00** 5.00 / f_z 0.12 **0.23** 0.34	●	●															
		HNMX	090520-GG	RE 2.0	a_p 1.00 **3.00** 5.00 / f_z 0.12 **0.23** 0.34	●	●															
	GH K reinforced edge	HNEX	090516-GH	RE 1.6	a_p 1.00 **3.50** 6.00 / f_z 0.14 **0.25** 0.36	●	●															
			090530-GH	RE 3.0	a_p 1.00 **3.50** 6.00 / f_z 0.16 **0.28** 0.40	●	●															
		HNMX	090516-GH	RE 1.6	a_p 1.00 **3.50** 6.00 / f_z 0.14 **0.25** 0.36	●	●															
PCBN	UE K H solid	HNEN	090520S-UE	K RE 2.0	a_p 1.00 **2.00** 3.00 / f_z 0.10 **0.20** 0.30				●													
				H RE 2.0	a_p 0.50 **1.00** 1.50 / f_z 0.05 **0.10** 0.15																	
CERAMIC	T02020 K	HNEN	090520-GP	RE 2.0	a_p 1.00 **2.50** 4.00 / f_z 0.08 **0.16** 0.24			●														
			090530-GP	RE 3.0	a_p 1.00 **2.50** 4.00 / f_z 0.08 **0.16** 0.24			●														

● stock standard

nikkoTOOLS

ARBOR

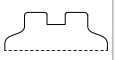

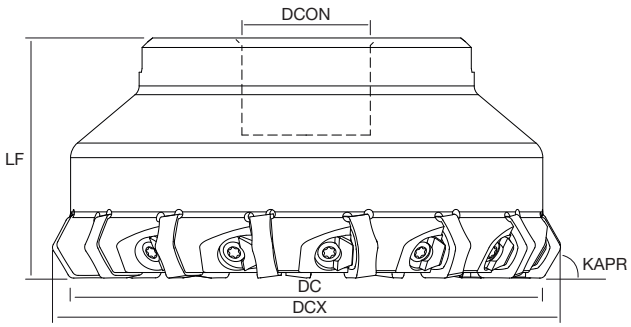

FACING

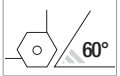

K

DOUBLEHEX
Facing (KAPR 60°)

				DC	DCX	Z	DCON	LF	KG	MIID	
ARBOR	NT-HN09	D080-F27-Z8	●	80	90	8	27	50	1.40	HNEX09 HNMX09	
		D080-F27-Z10	●			10	27	50	1.40		
		D100-F32-Z10	●	100	110	10	32	50	2.00		
		D100-F32-Z14	●			14	32	50	2.00		
		D125-F40-Z12	●	125	135	12	40	63	3.80		
		D125-F40-Z15	●			15	40	63	3.80		
		D160-F40-Z15	●	160	170	15	40	63	5.30		
		D160-F40-Z20	●			20	40	63	5.30		

● stock standard

Spare Parts	WEDGE	WEDGE SCREW	WRENCH
NT-HN09 D□□□	NT-WD090	NT-SC090	NT-WR030

TURNING
THREADING
GROOVING
MILLING
DRILLING
ACCESSORIES

SE□□

4FACEPLUS
Facing 45° - positive

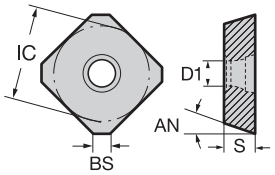

4 edges

Size	IC	S	D1	AN
13	13.40	3.97	4.40	20°

ISO513	JP5520 (HC-PVD)	JP5530 (HC-PVD)	JP7525 (HC-PVD)	JP9535 (HC-PVD)	JC7515 (HC-CVD)	JC7530 (HC-CVD)	JU6520 (HW)	JU4525 (HT)
P	80 250	60 230						160 350
M	60 160	60 150		60 200				100 240
K			100 240		120 350	100 300		160 380
N							200 1000	
S				40 100				
H								

GRADE APPLICATION AREA	
■ main application	Light cut, stable machining
■ applicable	Variable condition, general machining
	Heavy cut, unstable machining

Hardness: − +
Toughness: + −

SHARP	SC P M S	SEET	13T3AGEN-SC	BS 1.7	a_p ▸ 0.50 **2.00** 3.50 f_z ▸ 0.08 **0.14** 0.20	●	●		●													
GENERAL	GP P M	SEET	13T3AGEN-GP	BS 1.2	a_p ▸ 1.00 **2.50** 4.00 f_z ▸ 0.10 **0.20** 0.30	●	●		●				●									
		SEMT	13T3AGEN-GP	BS 1.2	a_p ▸ 1.00 **2.50** 4.00 f_z ▸ 0.10 **0.20** 0.30	●	●		●													
	GG K 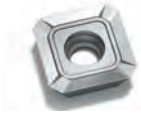	SEET	13T3AGSN-GG	BS 1.3	a_p ▸ 1.00 **2.50** 4.00 f_z ▸ 0.12 **0.22** 0.32			●		▽												
		SEMT	13T3AGSN-GG	BS 1.3	a_p ▸ 1.00 **2.50** 4.00 f_z ▸ 0.12 **0.22** 0.32			▲														
REINFORCED	TE P	SEET	13T3AGSN-TE	BS 1.2	a_p ▸ 1.50 **3.00** 4.50 f_z ▸ 0.14 **0.25** 0.36	●	●															
		SEMT	13T3AGSN-TE	BS 1.2	a_p ▸ 1.50 **3.00** 4.50 f_z ▸ 0.14 **0.25** 0.36	●	●															
	GH K	SEET	13T3AGSN-GH	BS 1.3	a_p ▸ 1.50 **3.00** 4.50 f_z ▸ 0.16 **0.28** 0.40			●														
		SEMT	13T3AGSN-GH	BS 1.3	a_p ▸ 1.50 **3.00** 4.50 f_z ▸ 0.16 **0.28** 0.40			▲														
	Flat K 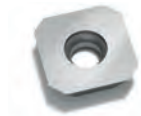	SEEW	13T3AGSN	BS 2.0	a_p ▸ 1.50 **3.00** 4.50 f_z ▸ 0.20 **0.30** 0.40						●											
WIPER	WU P K 1 edge	SEET	13T3-WU	BS 7.5	a_p ▸ 0.50 **1.00** 1.50 f_z ▸ 0.08 **0.16** 0.24		●	▲														

● stock standard, ▲ upcoming introduction, ▽ stock exhaustion

SE□□

4FACEPLUS
Facing 45° - positive

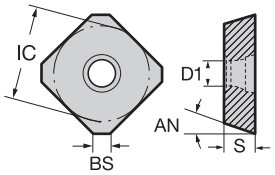

4 edges

Size	IC	S	D1	AN
13	13.40	3.97	4.40	20°

ISO513	HC-PVD JP5520	HC-PVD JP5530	HC-PVD JP7525	HC-PVD JP9535	HC-CVD JC7515	HC-CVD JC7530	HW JU6520	HT JU4525
P	80 250	60 230						160 350
M	60 160	60 150		60 200				100 240
K			100 240		120 350	100 300		160 380
N							200 1000	
S				40 100				
H								

GRADE APPLICATION AREA	
main application	Variable condition, general machining
applicable	Heavy cut, unstable machining
	Light cut, stable machining

Hardness: – +
Toughness: + –

ALUMINIUM																								
AL N polished surface	SEET	13T3AGFN-AL	BS 2.2	a_p ▸ 0.50 **2.50** 4.50 f_z ▸ 0.10 **0.22** 0.35									●											

● stock standard

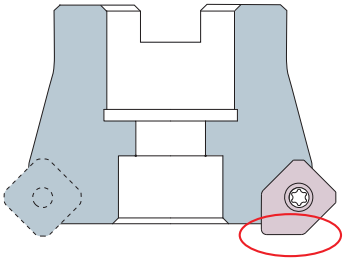

The wiper insert must be mounted face towards the centre of the holder.
Only 1 wiper insert per setup.

nikkoTOOLS

ARBOR

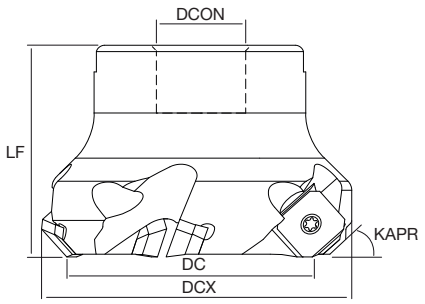

FACING

45°

P M K N S

4FACEPLUS
Facing (KAPR 45°)

				DC	DCX	Z	DCON	LF	KG	MIID	
ARBOR	NT-SE13	D050-F22-Z4	●	50	63	4	22	40	0.50	SEET13 SEMT13	
		D050-F22-Z5	●			5	22	40	0.50		
		D063-F22-Z5	●	63	76	5	22	50	0.70		
		D063-F22-Z6	●			6	22	50	0.70		
		D080-F27-Z6	●	80	93	6	27	50	1.20		
		D080-F27-Z8	●			8	27	50	1.20		
		D100-F32-Z7	●	100	113	7	32	50	1.80		
		D100-F32-Z10	●			10	32	50	1.80		
		D125-F40-Z8	●	125	138	8	40	63	3.00		
		D125-F40-Z12	●			12	40	63	3.00		
		D160-F40-Z10	●	160	173	10	40	63	5.00		
		D200-F60-Z12	●	200	213	12	60	63	8.00		

● stock standard

Spare Parts

	SHIM	SHIM SCREW	SHIM WRENCH	INSERT SCREW	INSERT WRENCH
NT-SE13 D□□□	NT-SH004	NT-SR002	NT-WR035	NT-ST040	NT-FTB15

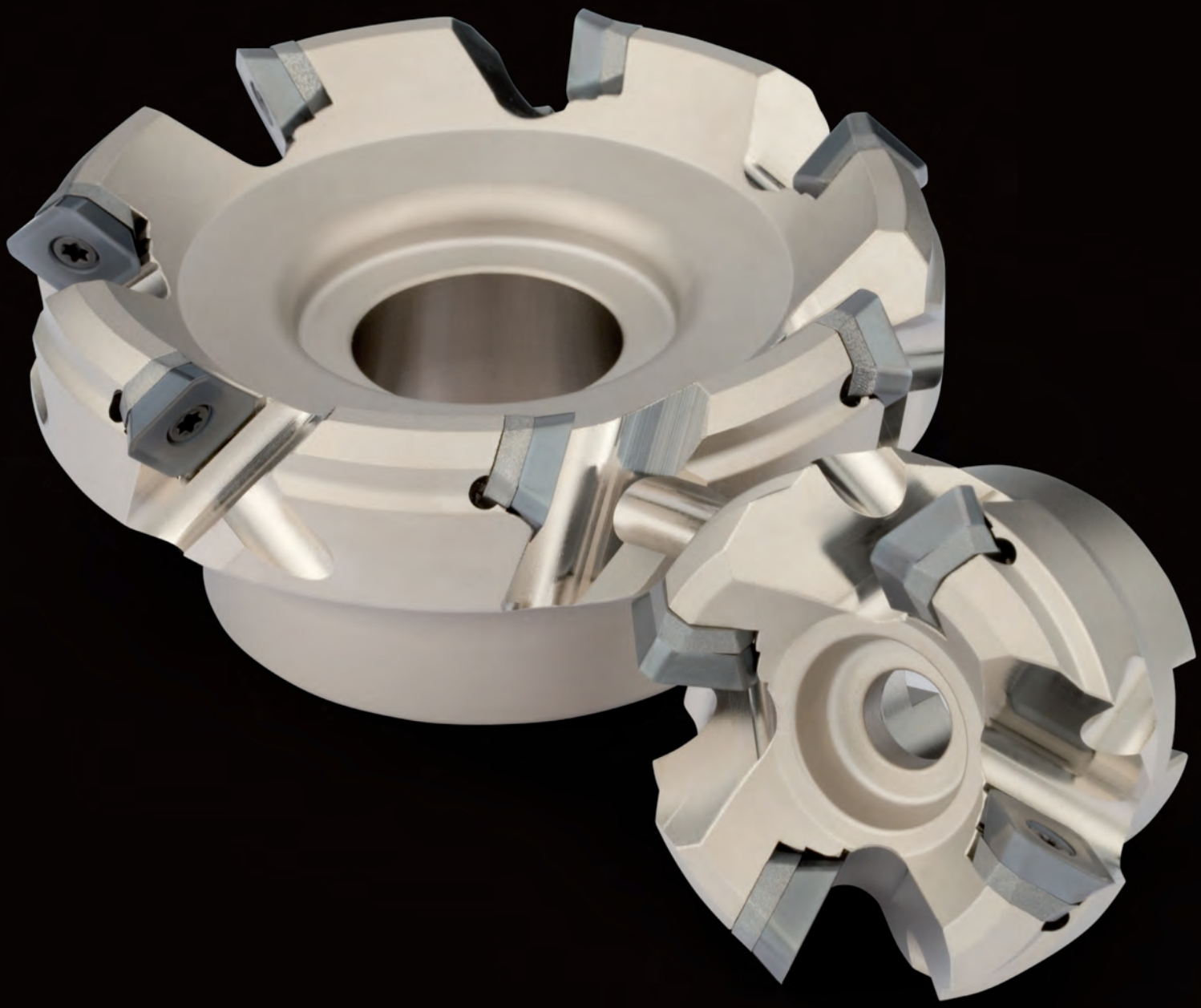

TURNING
THREADING
GROOVING
MILLING
DRILLING
ACCESSORIES

OFKT

OKTOPLUS
Facing 43° - positive

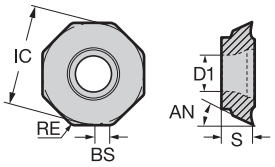

8 edges

Size	IC	S	D1	AN
05	12.70	3.97	4.40	26°

ISO513	JP8525 (HC-PVD)	JP9525 (HC-PVD)	JC7530 (HC-CVD)	JU6520 (HW)
P	80 250			
M		70 220		
K			100 300	
N				200 1000
S				
H				

GRADE APPLICATION AREA		Hardness	Toughness
	Light cut, stable machining	+	–
■ main application	Variable condition, general machining		
■ applicable	Heavy cut, unstable machining	–	+

GENERAL	GP P M K 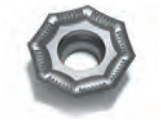	OFKT	05T305-GP	RE 0.5 BS 1.1	a_p ▸ f_z ▸	1.00 **2.00** 3.00 0.07 **0.16** 0.25	●	●	●		
ALUMINIUM	AL N polished surface	OFKT	05T305-AL	RE 0.5 BS 1.1	a_p ▸ f_z ▸	0.50 **1.50** 2.50 0.10 **0.15** 0.20				●	

● stock standard

nikkoTOOLS

ARBOR

INTERNAL COOLANT

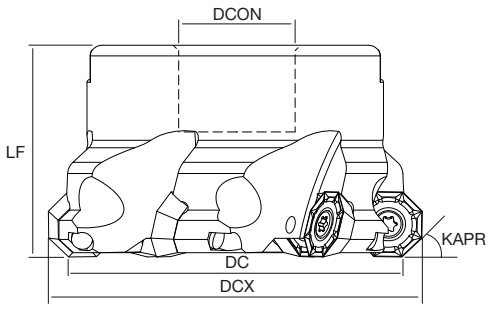

FACING

43°

P M K N

OKTOPLUS - OF
Facing (KAPR 43°)

				DC	DCX	Z	DCON	LF	KG	MIID	
ARBOR	NT-OF05H	D050-F22-Z5	●	50	58	5	22	40	0.45	OFKT05	
		D063-F22-Z6	●	63	71	6	22	40	0.65		
		D080-F27-Z7	●	80	88	7	27	50	1.00		
		D100-F32-Z8	●	100	108	8	32	50	1.60		

● stock standard

Spare Parts	INSERT SCREW	INSERT WRENCH
NT-OF05H D□□□	NT-ST024	NT-FTB15

nikkoTOOLS

ODT

OKTOPLUS
Facing 43° - positive

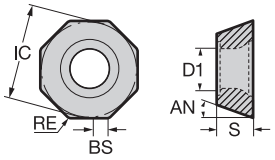

8 edges

Size	IC	S	D1	AN
06	15.875	5.56	5.50	15°

ISO513	JP5520 (HC-PVD)	JP5530 (HC-PVD)	JP7525 (HC-PVD)	JP9535 (HC-PVD)	JC7515 (HC-CVD)	JU6520 (HW)
P	80 250	60 230				
M	60 160	60 150		60 200		
K			100 240		120 350	
N						200 1000
S				40 100		
H						

GRADE APPLICATION AREA	
■ main application	Light cut, stable machining
■ applicable	Variable condition, general machining
	Heavy cut, unstable machining

Hardness: + / –; Toughness: – / +

						JP5520	JP5530	JP7525	JP9535	JC7515	JU6520
SHARP	SC P M S	ODKT	060508-SC	RE 0.8 BS 1.8	a_p ▸ 0.50 **1.50** 2.50; f_z ▸ 0.08 **0.15** 0.22	●	●		●		
GENERAL	GP P M K 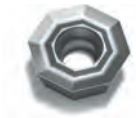	ODKT	060508-GP	RE 0.8 BS 1.8	a_p ▸ 1.00 **2.00** 3.00; f_z ▸ 0.10 **0.21** 0.32	●	●	●	●		
		ODMT	060508-GP	RE 0.8 BS 1.8	a_p ▸ 1.00 **2.00** 3.00; f_z ▸ 0.10 **0.21** 0.32	●	●	●	●	●	
REINFORCED	TE P K	ODKT	060508-TE	RE 0.8 BS 1.8	a_p ▸ 1.50 **2.50** 3.50; f_z ▸ 0.14 **0.26** 0.38	●	●				
		ODMT	060508-TE	RE 0.8 BS 1.8	a_p ▸ 1.50 **2.50** 3.50; f_z ▸ 0.14 **0.26** 0.38	●	●	●		●	
WIPER	WU P K 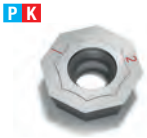 2 edges	ODKT	060508-WU	RE 0.8 BS 6.4	a_p ▸ 0.50 **1.00** 1.50; f_z ▸ 0.08 **0.16** 0.24	●	●	▲			
ALUMINIUM	AL N polished surface	ODKT	060508-AL	RE 0.8 BS 1.8	a_p ▸ 0.50 **2.00** 3.50; f_z ▸ 0.10 **0.22** 0.35						●

● stock standard, ▲ upcoming introduction

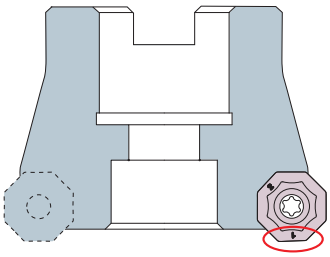

Please follow the clamping procedure shown in the picture.
Only 1 wiper insert per setup.

nikkoTOOLS

ARBOR

INTERNAL COOLANT

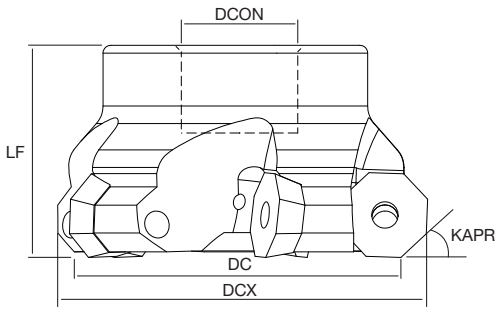

FACING

43°

P M K N S

OKTOPLUS - OD
Facing (KAPR 43°)

				DC	DCX	Z	DCON	LF	KG	MIID	
ARBOR	NT-OD06H	D050-F22-Z4	●	50	60	4	22	40	0.40	ODKT06 ODMT06	
		D063-F22-Z5	●	63	73	5	22	40	0.60		
		D080-F27-Z6	●	80	90	6	27	50	1.10		
		D100-F32-Z7	●	100	110	7	32	50	1.60		
		D125-F40-Z8	●	125	135	8	40	63	2.70		
		D160-F40-Z10	●	160	170	10	40	63	4.20		

● stock standard

Spare Parts	INSERT SCREW	INSERT WRENCH
NT-OD06H D□□□	NT-ST021	NT-FTB20

nikkoTOOLS

SEHX

ISO
Facing 45° - positive

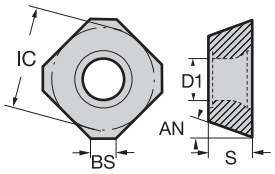

4 edges

Size	IC	S	D1	AN
12	12.70	4.76	5.50	20°

ISO513	JP5520 (HC-PVD)	JP8525 (HC-PVD)	JP9525 (HC-PVD)	JC7530 (HC-CVD)	JC8530 (HC-CVD)	JU6520 (HW)	JU4525 (HT)
P	80 250	80 250			100 320		160 350
M	60 160		70 220				100 240
K				100 300			160 380
N						200 1000	
S							
H							

GRADE APPLICATION AREA	Light cut, stable machining	Hardness + / Toughness −
■ main application	Variable condition, general machining	
■ applicable	Heavy cut, unstable machining	Hardness − / Toughness +

						JP5520	JP8525	JP9525	JC7530	JC8530	JU6520	JU4525
SHARP	SC P M 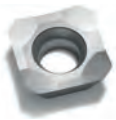	SEHX	1204AFEN-SC	BS 2.5	a_p 0.50 **2.00** 3.50 f_z 0.08 **0.15** 0.22	●						●
GENERAL	GP P M 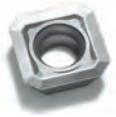	SEHX	1204AFSN-GP	BS 1.8	a_p 1.00 **2.50** 4.00 f_z 0.10 **0.20** 0.30		●	●		●		
REINFORCED	Flat K	SEHX	1204AFSN	BS 1.8	a_p 1.50 **3.00** 4.50 f_z 0.20 **0.30** 0.40				●			
ALUMINIUM	AL N 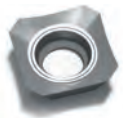 polished surface	SEHX	1204AFFN-AL	BS 2.5	a_p 0.50 **2.50** 4.50 f_z 0.10 **0.22** 0.35						●	

● stock standard

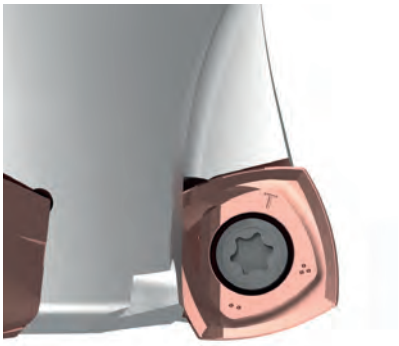

MILLING High Feed

HF4PLUS .224

SPMT

HF4PLUS
High Feed - positive

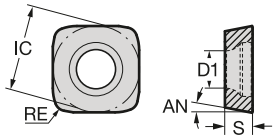

4 edges

Size	IC	S	D1	AN
07	7.80	2.80	3.50	11°

ISO513	JP5520 (HC-PVD)	JP5530 (HC-PVD)	JP7525 (HC-PVD)	JP9535 (HC-PVD)
P	80 250	60 230		
M	60 160	60 150		60 200
K			100 240	
N				
S				40 100
H				

GRADE APPLICATION AREA	
main application	Variable condition, general machining
applicable	Heavy cut, unstable machining
	Light cut, stable machining

Hardness: − +
Toughness: + −

						JP5520	JP5530	JP7525	JP9535
SHARP	SC P M S	SPMT 07T210R-SC	RE1.0	a_p ▸ 0.20 **0.80** 1.40 f_z ▸ 0.50 **0.90** 1.30			●		●
GENERAL	GP P M K	SPMT 07T210R-GP	RE1.0	a_p ▸ 0.20 **0.80** 1.40 f_z ▸ 0.60 **1.00** 1.40			●	●	●

● stock standard

IMPORTANT NOTICE FOR CNC PROGRAMMING

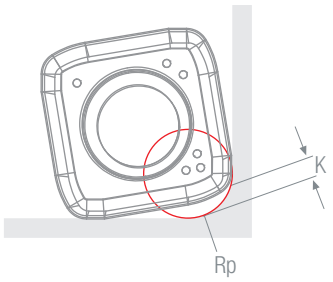

	SPMT07T210
Rp THEORETICAL RADIUS FOR CNC PROGRAMMING	2.00
K UNCUT PORTION	0.68

nikkoTOOLS

SDMT

HF4PLUS
High Feed - positive

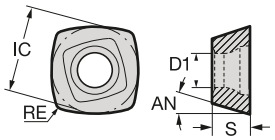

4 edges

Size	IC	S	D1	AN
10	10.00	4.76	4.00	15°
12	12.70	5.56	4.40	15°

ISO513	JP5520 (HC-PVD)	JP5530 (HC-PVD)	JP7525 (HC-PVD)	JP9535 (HC-PVD)
P	80 250	60 230		
M	60 160	60 150		60 200
K			100 240	
N				
S				40 100
H				

GRADE APPLICATION AREA	
main application	Variable condition, general machining
applicable	Heavy cut, unstable machining
	Light cut, stable machining

Hardness: − +
Toughness: + −

		Size	a_p	f_z	JP5520	JP5530	JP7525	JP9535
SHARP	SC P M S	SDMT 100410R-SC	RE1.0	0.30 **1.00** 1.70 / 0.50 **1.00** 1.50		●		●
GENERAL	GP P M K	SDMT 100410R-GP	RE1.0	0.30 **1.00** 1.70 / 0.60 **1.10** 1.60		●	●	●
		SDMT 120512R-GP	RE1.2	0.50 **1.20** 2.00 / 0.80 **1.30** 1.80	●	●	●	●
REINFORCED	TE P K	SDMT 100410R-TE	RE1.0	0.30 **1.00** 1.70 / 0.70 **1.20** 1.70		●		●
		SDMT 120512R-TE	RE1.2	0.50 **1.20** 2.00 / 1.00 **1.50** 2.00	●	●		

● stock standard

IMPORTANT NOTICE FOR CNC PROGRAMMING

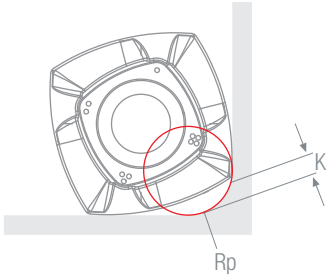

	SDMT100410	SDMT120512
Rp THEORETICAL RADIUS FOR CNC PROGRAMMING	3.00	4.00
K UNCUT PORTION	0.76	0.85

CYLINDRICAL

INTERNAL COOLANT

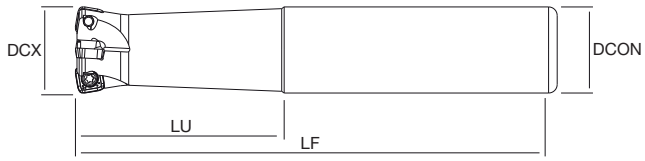

HIGH FEED

P M K S

SCREW-IN

INTERNAL COOLANT

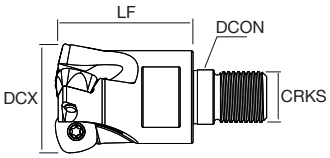

ARBOR

INTERNAL COOLANT

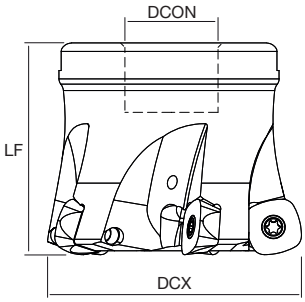

	HF4PLUS High Feed			DCX	Z	DCON	LF	LU	CRKS	KG	MIID
CYLINDRICAL	NT-SP07HF	D020-S20-Z3	●	20	3	20	130	50	-	0.30	SPMT07
		D025-S25-Z4	●	25	4	25	140	60	-	0.50	
		D032-S32-Z5	●	32	5	32	150	70	-	1.00	
SCREW-IN	NT-SP07HF	D020-M10-Z2	●	20	2	10.5	30	-	M10	0.10	SPMT07
		D020-M10-Z3	●		3	10.5	30	-	M10	0.10	
		D025-M12-Z3	●	25	3	12.5	35	-	M12	0.15	
		D025-M12-Z4	●		4	12.5	35	-	M12	0.15	
		D032-M16-Z4	●	32	4	17	40	-	M16	0.30	
		D032-M16-Z5	●		5	17	40	-	M16	0.30	
		D035-M16-Z5	●	35	5	17	40	-	M16	0.30	
		D042-M16-Z6	●	42	6	17	40	-	M16	0.35	
	NT-SD10HF	D035-M16-Z4	●	35	4	17	40	-	M16	0.30	SDMT10
		D042-M16-Z5	●	42	5	17	40	-	M16	0.35	
	NT-SD12HF	D032-M16-Z2	●	32	2	17	43	-	M16	0.25	SDMT12
		D035-M16-Z3	●	35	3	17	43	-	M16	0.25	
		D040-M16-Z4	●	40	4	17	43	-	M16	0.25	
		D042-M16-Z4	●	42	4	17	43	-	M16	0.25	
ARBOR	NT-SP07HF	D040-F16-Z5	●	40	5	16	40	-	-	0.25	SPMT07
		D040-F16-Z6	●		6	16	40	-	-	0.25	
		D042-F16-Z5	●	42	5	16	40	-	-	0.25	
		D042-F16-Z6	●		6	16	40	-	-	0.25	
		D050-F22-Z7	●	50	7	22	50	-	-	0.55	
		D052-F22-Z7	●	52	7	22	50	-	-	0.55	

● stock standard

nikkoTOOLS

HF4PLUS High Feed				DCX	Z	DCON	LF	LU	CRKS	KG	MIID
ARBOR	NT-SD10HF	D050-F22-Z6	●	50	6	22	50	-	-	0.55	SDMT10
		D052-F22-Z6	●	52	6	22	50	-	-	0.55	
		D063-F27-Z7	●	63	7	27	50	-	-	0.75	
		D066-F27-Z7	●	66	7	27	50	-	-	0.80	
		D080-F27-Z8	●	80	8	27	50	-	-	1.10	
	NT-SD12HF	D042-F16-Z4	●	42	4	16	40	-	-	0.25	SDMT12
		D050-F22-Z4	●	50	4	22	50	-	-	0.45	
		D050-F22-Z5	●		5	22	50	-	-	0.45	
		D052-F22-Z4	●	52	4	22	50	-	-	0.45	
		D052-F22-Z5	●		5	22	50	-	-	0.45	
		D063-F22-Z4	●	63	4	22	50	-	-	0.70	
		D063-F27-Z4	●		4	27	50	-	-	0.70	
		D063-F22-Z5	●		5	22	50	-	-	0.70	
		D063-F27-Z5	●		5	27	50	-	-	0.70	
		D066-F27-Z6	●	66	6	27	50	-	-	0.70	
		D080-F27-Z6	●	80	6	27	50	-	-	1.10	
		D080-F27-Z7	●		7	27	50	-	-	1.10	

● stock standard

Spare Parts	INSERT SCREW	INSERT WRENCH
NT-SP07HF DCX ≤ 25	NT-ST034	NT-FTB10
NT-SP07HF DCX > 25	NT-ST033	
NT-SD10HF D□□□	NT-ST036	NT-FTB15
NT-SD12HF D□□□	NT-ST024	NT-FTB15

MILLING Copying

ROUNDPLUS .230

RD□□

ROUNDPLUS
Copying - positive

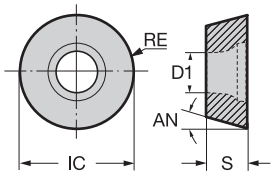

Size	IC	S	D1	AN
05	5.00	1.51	2.20	15°
07	7.00	2.38	2.80	15°
10	10.00	3.18	3.80	15°
12	12.00	4.76	4.40	15°
16	16.00	4.76	5.00	15°

ISO513	HC-PVD JP5520	HC-PVD JP5530	HC-PVD JP7525	HC-PVD JP9535	HT JU4525
P	80 250	60 230			160 350
M	60 160	60 150		60 200	100 240
K			100 240		160 380
N					
S				40 100	
H					

GRADE APPLICATION AREA	Light cut, stable machining	Hardness + / −	Toughness − / +
main application	Variable condition, general machining		
applicable	Heavy cut, unstable machining		

SHARP	SC P M 20~22°	RDET	1003M0-SC	RE 5.0	a_p 0.50 **2.00** 3.50 f_z 0.10 **0.22** 0.34	▽	▽					
			1204M0-SC	RE 6.0	a_p 0.50 **2.50** 4.50 f_z 0.15 **0.30** 0.45	●	●					
			1604M0-SC	RE 8.0	a_p 1.00 **3.00** 5.00 f_z 0.22 **0.44** 0.62	●	●					
GENERAL	GP P M S 14~18°	RDET	1003M0-GP	RE 5.0	a_p 0.50 **2.00** 3.50 f_z 0.12 **0.25** 0.38	●	●		●			
			1204M0-GP	RE 6.0	a_p 0.50 **2.50** 4.50 f_z 0.18 **0.35** 0.52	●	●		●			
			1604M0-GP	RE 8.0	a_p 1.00 **3.00** 5.00 f_z 0.25 **0.45** 0.65	●	●		●			
		RDMT	1204M0-GP	RE 6.0	a_p 0.50 **2.50** 4.50 f_z 0.18 **0.35** 0.52	●	●					
REINFORCED	TES P K	RDEW	0501M0-TES	RE 2.5	a_p 0.30 **1.00** 1.70 f_z 0.08 **0.15** 0.22	●	●	●	○			
			0702M0-TES	RE 3.5	a_p 0.30 **1.50** 2.70 f_z 0.08 **0.16** 0.24	●			○	▽		
	TE P K	RDEW	0702M0-TE	RE 3.5	a_p 0.30 **1.50** 2.70 f_z 0.08 **0.19** 0.30	●	●	●				
			1003M0-TE	RE 5.0	a_p 0.50 **2.00** 3.50 f_z 0.14 **0.27** 0.40	●	●	●				
			1204M0-TE	RE 6.0	a_p 0.50 **2.50** 4.50 f_z 0.20 **0.40** 0.60	●	●	●				
			1604M0-TE	RE 8.0	a_p 1.00 **3.00** 5.00 f_z 0.30 **0.50** 0.70	●	●	●				
		RDMW	1604M0-TE	RE 8.0	a_p 1.00 **3.00** 5.00 f_z 0.30 **0.50** 0.70	●	●					
	TE-D6 P with **6 dots**	RDEW	1204M0-TE-D6	RE 6.0	a_p 0.50 **2.50** 4.50 f_z 0.20 **0.40** 0.60	●	●					
		RDMW	1204M0-TE-D6	RE 6.0	a_p 0.50 **2.50** 4.50 f_z 0.20 **0.40** 0.60	●						
	TE-D8 P with **8 dots**	RDEW	1204M0-TE-D8	RE 6.0	a_p 0.50 **2.50** 4.50 f_z 0.20 **0.40** 0.60	●	●					
		RDMW	1204M0-TE-D8	RE 6.0	a_p 0.50 **2.50** 4.50 f_z 0.20 **0.40** 0.60	○	●					

● stock standard, ○ non-standard stock, ▽ stock exhaustion

CYLINDRICAL

INTERNAL COOLANT

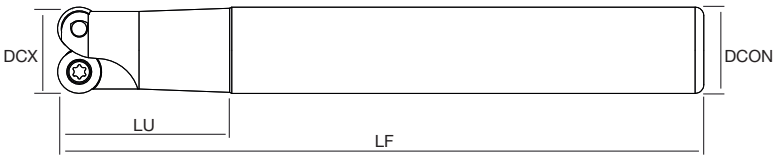

COPYING 360°

P M K S

SCREW-IN

INTERNAL COOLANT

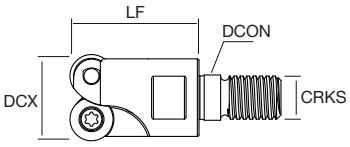

ARBOR

INTERNAL COOLANT

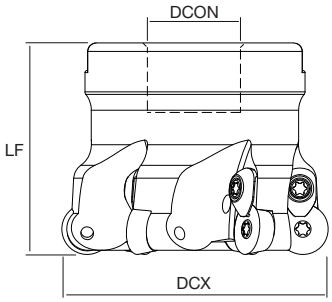

ROUNDPLUS - RD
Copying

				DCX	Z	DCON	LF	LU	CRKS	KG	MIID
CYLINDRICAL	NT-RD05H	D009-S08-Z2-L100	●*	9	2	8	100	12	-	0.10	RDEW05
		D010-S10-Z2-L100	●	10	2	10	100	18	-	0.10	
		D011-S10-Z2-L100	●*	11	2	10	100	15	-	0.10	
		D012-S12-Z3-L100	●	12	3	12	100	22	-	0.10	
		D013-S12-Z3-L100	●*	13	3	12	100	18	-	0.10	
		D016-S16-Z4-L150	●*	16	4	16	150	30	-	0.25	
		D017-S16-Z4-L150	●*	17	4	16	150	20	-	0.25	
	NT-RD07H	D016-S16-Z2-L150	●	16	2	16	150	25	-	0.25	RDEW07
		D017-S16-Z2-L150	●	17	2	16	150	20	-	0.25	
		D020-S20-Z3-L150	●*	20	3	20	150	35	-	0.40	
		D021-S20-Z3-L150	●*	21	3	20	150	25	-	0.40	
		D025-S25-Z5-L150	●*	25	5	25	150	40	-	0.60	
		D026-S25-Z5-L150	●*	26	5	25	150	25	-	0.60	
		D035-S32-Z6-L150	●*	35	6	32	150	30	-	1.00	
	NT-RD10H	D020-S20-Z2-L150	●	20	2	20	150	40	-	0.35	RDET10 RDEW10
		D021-S20-Z2-L150	●	21	2	20	150	25	-	0.35	
		D025-S25-Z3-L150	●	25	3	25	150	40	-	0.55	
		D026-S25-Z3-L150	●*	26	3	25	150	25	-	0.55	
		D030-S25-Z3-L150	●*	30	3	25	150	25	-	0.60	
		D032-S32-Z3-L150	●	32	3	32	150	40	-	0.90	
		D035-S32-Z4-L150	●*	35	4	32	150	35	-	0.90	

● stock standard

ITEMS MARKED WITH *
We will continue to supply the equivalent milling cutters without coolant holes until stock exhaustion

ROUNDPLUS - RD
Copying

				DCX	Z	DCON	LF	LU	CRKS	KG	MIID
SCREW-IN	NT-RD05H	D012-M06-Z2	●*	12	2	6.5	18	-	M6	0.10	RDEW05
		D012-M06-Z3	●*		3	6.5	18	-	M6	0.10	
		D013-M06-Z2	●*	13	2	6.5	18	-	M6	0.10	
		D013-M06-Z3	●*		3	6.5	18	-	M6	0.10	
		D016-M08-Z4	●*	16	4	8.5	23	-	M8	0.10	
		D017-M08-Z4	●*	17	4	8.5	23	-	M8	0.10	
	NT-RD07H	D016-M08-Z2	●*	16	2	8.5	23	-	M8	0.10	RDEW07
		D016-M08-Z3	●*		3	8.5	23	-	M8	0.10	
		D017-M08-Z2	●*	17	2	8.5	23	-	M8	0.10	
		D017-M08-Z3	●*		3	8.5	23	-	M8	0.10	
		D020-M10-Z3	●	20	3	10.5	30	-	M10	0.10	
		D021-M10-Z2	●*	21	2	10.5	30	-	M10	0.10	
		D021-M10-Z3	●*		3	10.5	30	-	M10	0.10	
		D025-M12-Z4	●	25	4	12.5	35	-	M12	0.15	
		D025-M12-Z5	●*		5	12.5	35	-	M12	0.15	
		D026-M12-Z4	●*	26	4	12.5	35	-	M12	0.15	
		D026-M12-Z5	●*		5	12.5	35	-	M12	0.15	
		D035-M16-Z5	●*	35	5	17	43	-	M16	0.25	
		D035-M16-Z6	●*		6	17	43	-	M16	0.25	
	NT-RD10H	D020-M10-Z2	●	20	2	10.5	30	-	M10	0.10	RDET10 RDEW10
		D021-M10-Z2	●*	21	2	10.5	30	-	M12	0.10	
		D025-M12-Z3	●	25	3	12.5	35	-	M12	0.15	
		D026-M12-Z3	●*	26	3	12.5	35	-	M12	0.15	
		D030-M12-Z3	●*	30	3	12.5	35	-	M12	0.20	
		D032-M16-Z3	●	32	3	17	43	-	M16	0.20	
		D035-M16-Z3	●	35	3	17	43	-	M16	0.25	
		D035-M16-Z4	●		4	17	43	-	M16	0.25	
		D040-M16-Z4	●	40	4	17	43	-	M16	0.30	
ARBOR	NT-RD10H	D042-F16-Z5	●	42	5	16	40	-	-	0.25	RDET10 RDEW10
		D052-F22-Z6	●	52	6	22	40	-	-	0.45	
	NT-RD12H	D042-F16-Z4	●	42	4	16	50	-	-	0.30	RDET12 RDEW12 RDMT12 RDMW12
		D050-F22-Z4	●*	50	4	22	50	-	-	0.40	
		D050-F22-Z5	●		5	22	50	-	-	0.40	
		D052-F22-Z4	●	52	4	22	50	-	-	0.45	
		D052-F22-Z5	●		5	22	50	-	-	0.45	
		D063-F22-Z5	●	63	5	22	50	-	-	0.65	
		D063-F22-Z6	●		6	22	50	-	-	0.65	
		D066-F22-Z6	●	66	6	22	50	-	-	0.80	
		D080-F27-Z6	▽*	80	6	27	50	-	-	1.00	
		D080-F27-Z7	●		7	27	50	-	-	1.00	
	NT-RD16H	D063-F22-Z5	●	63	5	22	50	-	-	0.60	RDET16 RDEW16 RDMW16
		D066-F22-Z5	▽*	66	5	22	50	-	-	0.60	
		D066-F27-Z5	●		5	27	50	-	-	0.60	
		D080-F27-Z5	●	80	5	27	50	-	-	0.90	
		D080-F27-Z6	●		6	27	50	-	-	0.90	
		D100-F32-Z7	●	100	7	32	50	-	-	1.60	
		D125-F40-Z8	●	125	8	40	63	-	-	2.90	

● stock standard, ▽ stock exhaustion

ITEMS MARKED WITH *
We will continue to supply the equivalent milling cutters without coolant holes until stock exhaustion

Spare Parts	CLAMP SET	INSERT SCREW	INSERT WRENCH
NT-RD05H DCX ≤ 10	-	NT-ST026	NT-FTB06
NT-RD05H DCX > 10		NT-ST009	
NT-RD07H D□□□	-	NT-ST018	NT-FTB08
NT-RD10H D□□□ DCX ≤ 26	-	NT-ST012	NT-FTB15
NT-RD10H D□□□ DCX = 30		NT-ST013	
NT-RD10H D□□□ DCX ≥ 32	NT-CS013		
NT-RD12H D□□□	NT-CS014	NT-ST017	NT-FTB15
NT-RD16H D□□□	NT-CS021	NT-ST023	NT-FTB20

TURNING
THREADING
GROOVING
MILLING
DRILLING
ACCESSORIES

RP□□

ROUNDPLUS
Copying

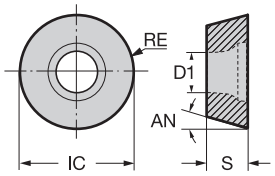

Size	IC	S	D1	AN
12	12.00	4.76	4.40	11°

ISO513	JP5520 (HC-PVD)	JP5530 (HC-PVD)	JP9535 (HC-PVD)
P	80 250	60 230	
M	60 160	60 150	60 200
K			
N			
S			40 100
H			

GRADE APPLICATION AREA	Light cut, stable machining	Hardness + / −	Toughness − / +
■ main application	Variable condition, general machining		
■ applicable	Heavy cut, unstable machining		

		Size	a_p ▸			f_z ▸			JP5520	JP5530	JP9535
SHARP	SC P M, 20–22°	RPET	1204M0-SC	RE 6.0	0.50	**2.50**	4.50	0.15	**0.30**	0.45	●	●	
GENERAL	GP P M S, 14–18°	RPET	1204M0-GP	RE 6.0	0.50	**2.50**	4.50	0.18	**0.35**	0.52	●	●	●
		RPMT	1204M0-GP	RE 6.0	0.50	**2.50**	4.50	0.18	**0.35**	0.52	●	●	
REINFORCED	TE P	RPEW	1204M0-TE	RE 6.0	0.50	**2.50**	4.50	0.20	**0.40**	0.60	○	●	
		RPMW	1204M0-TE	RE 6.0	0.50	**2.50**	4.50	0.20	**0.40**	0.60	●	●	

● stock standard, ○ non-standard stock

nikkoTOOLS

ARBOR

INTERNAL COOLANT

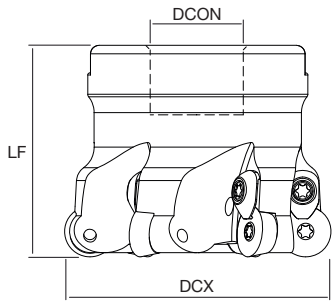

COPYING 360°

P M S

ROUNDPLUS - RP
Copying

				DCX	Z	DCON	LF	KG	MIID		
ARBOR	NT-RP12H	D042-F16-Z4	●	42	4	16	50	0.30	RPET12 RPEW12 RPMT12 RPMW12		
		D050-F22-Z5	●	50	5	22	50	0.45			
		D052-F22-Z5	●	52	5	22	50	0.50			
		D063-F22-Z6	●	63	6	22	50	0.70			
		D066-F22-Z6	●	66	6	22	50	0.80			
		D080-F27-Z7	●	80	7	27	50	1.00			

● stock standard

Spare Parts	CLAMP SET	INSERT SCREW	INSERT WRENCH
NT-RP12H D□□□	NT-CS013	NT-ST017	NT-FTB15

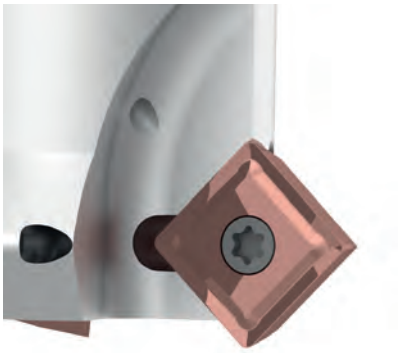

MILLING Chamfering

CHAMFERSQUARE .238

SP□X

CHAMFERSQUARE
Chamfering

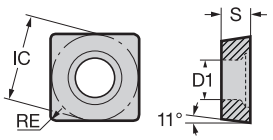

4 edges

Size	IC	S	D1	AN
05	5.00	2.38	2.50	11°
07	7.94	3.97	2.80	11°
09	9.80	4.30	4.10	11°

ISO513	HC-PVD JP5625	HC-PVD JP5530	HC-PVD JP9635	HW JU6520
P	80 250	60 230		
M	60 160	60 150	60 200	
K	80 200			
N				200 1000
S			40 100	
H				

GRADE APPLICATION AREA	
main application	Variable condition, general machining
applicable	Heavy cut, unstable machining
	Light cut, stable machining

Hardness: − +
Toughness: + −

								JP5625	JP5530	JP9635	JU6520
GENERAL	GP P M K S	SPMX 050204-GP	RE 0.4	f_z ▸	0.08	**0.10**	0.12	●	●	●	
		SPMX 07T308-GP	RE 0.8	f_z ▸	0.10	**0.15**	0.20	●	●	●	
		SPMX 090408-GP	RE 0.8	f_z ▸	0.10	**0.20**	0.30	●	●	●	
ALUMINIUM	AL N	SPGX 050204-AL	RE 0.4	f_z ▸	0.08	**0.10**	0.12				●
		SPGX 07T308-AL	RE 0.8	f_z ▸	0.10	**0.15**	0.20				●
		SPGX 090408-AL	RE 0.8	f_z ▸	0.10	**0.20**	0.30				●

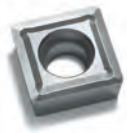

polished surface

● stock standard

CYLINDRICAL

INTERNAL COOLANT

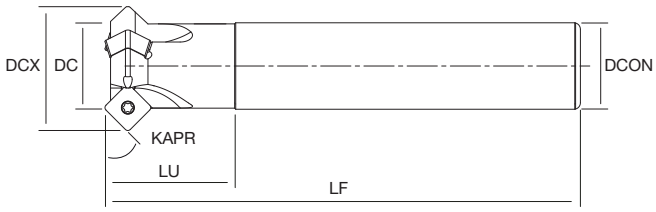

CHAMFERING

45°

P M K N S

SCREW-IN

INTERNAL COOLANT

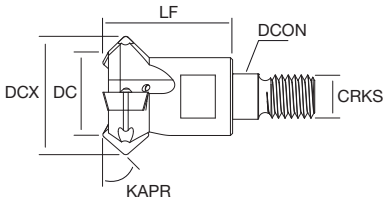

CHAMFERSQUARE Chamfering (KAPR 45°)				DC	DCX	Z	DCON	LF	LU (CRKS)	KG	MIID
CYLINDRICAL	NT-CHS45	D12/19-S12-Z3-05	●	12	19	3	12	80	20		SP□X05
		D16/22-S16-Z4-05	●	16	22	4	16	100	25		
		D20/30-S20-Z3-07	●	20	30	3	20	110	30		SP□X07
		D25/37-S25-Z3-09	●	25	37	3	25	120	35		SP□X09
		D32/44-S32-Z4-09	●	32	44	4	32	130	40		
SCREW-IN	NT-CHS45	D12/19-M06-Z3-05	●	12	19	3	6.5	20	(M6)		SP□X05
		D16/22-M08-Z4-05	●	16	22	4	8.5	25	(M8)		
		D20/30-M10-Z3-07	●	20	30	3	10.5	30	(M10)		SP□X07
		D25/37-M12-Z3-09	●	25	37	3	12.5	35	(M12)		SP□X09
		D32/44-M16-Z4-09	●	32	44	4	17	40	(M16)		

● stock standard

Spare Parts	INSERT SCREW	INSERT WRENCH
NT-CHS45 D12/19-S12-Z3-05	NT-ST059N	NT-FTB06
NT-CHS45 D16/22-S16-Z4-05		
NT-CHS45 D20/30-S20-Z3-07	NT-ST062N	NT-FTB07
NT-CHS45 D25/37-S25-Z3-09	NT-ST063N	NT-FTB15
NT-CHS45 D32/44-S32-Z4-09		
NT-CHS45 D12/19-M06-Z3-05	NT-ST059N	NT-FTB06
NT-CHS45 D16/22-M08-Z4-05		
NT-CHS45 D20/30-M10-Z3-07	NT-ST062N	NT-FTB07
NT-CHS45 D25/37-M12-Z3-09	NT-ST063N	NT-FTB15
NT-CHS45 D32/44-M16-Z4-09		

MILLING Advanced

nikkoTOOLS

RN

CERAMIC - PCBN
Negative

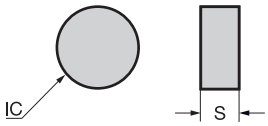

Size	IC	S
120400	12.70	4.76
120700	12.70	7.94

ISO513	CN NSA6000	BH NBH500C	BH NBH900U	BH NBH950U
P				
M				
K		800 2000	800 1500	600 1000
N				
S	800 1200			
H		150 300	100 250	80 180

GRADE APPLICATION AREA	Light cut, stable machining	Hardness + / –	Toughness – / +
main application	Variable condition, general machining		
applicable	Heavy cut, unstable machining		

CERAMIC	T01020 S	RNGN	120400-CC	-	a_p ▸ 0.50 **1.50** 2.50 f_z ▸ 0.06 **0.15** 0.24	●				
		RNGN	120700-CC	-	a_p ▸ 0.50 **1.50** 2.50 f_z ▸ 0.06 **0.15** 0.24	●				
PCBN	UE H solid	RNGN	120400S-UE	-	a_p ▸ 0.20 **0.50** 1.00 f_z ▸ 0.05 **0.10** 0.15		●	●	●	

● stock standard

nikkoTOOLS

ARBOR

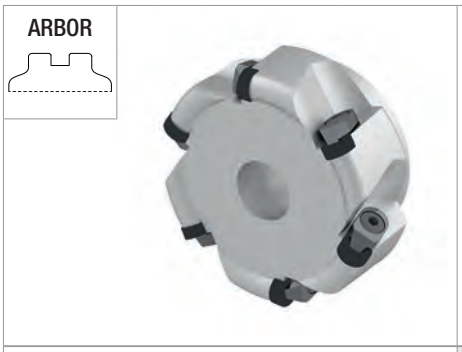

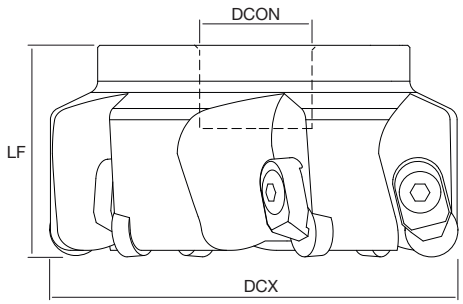

FACING 360°

S H

ROUND ADVANCED

				DCX	Z	DCON	LF	KG	MIID		
ARBOR	NT-RN12	D050-F22-Z4	●	50	4	22	50	0.50	RNGN1204		
		D063-F22-Z4	●	63	4	22	50	0.70			
		D080-F27-Z5	●	80	5	27	50	1.20			
		D100-F32-Z6	●	100	6	32	50	1.60			
	NT-RN12X	D050-F22-Z4	●	50	4	22	50	0.50	RNGN1207		
		D063-F22-Z4	●	63	4	22	50	0.70			
		D080-F27-Z5	●	80	5	27	50	1.20			
		D100-F32-Z6	●	100	6	32	50	1.60			

● stock standard

Spare Parts	CLAMP	CLAMP SCREW	SPRING	WRENCH
NT-RN12 D□□□	NT-CS028	NT-ST028	NT-SG028	NT-WR030

SN

CERAMIC - PCBN
Negative

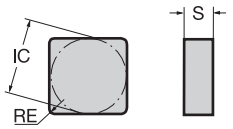

8 edges

Size	IC	S			ISO513	CM	CN		BH	
						NAC200	NSN400	NSN450	NBH550U	NBH900U
12	12.70	4.76			P					
					M					
					K	300 600	600 1200	500 1000	800 2000	800 1500
					N					
					S					
					H					

GRADE APPLICATION AREA	Light cut, stable machining	Hardness + / –	Toughness – / +
■ main application	Variable condition, general machining		
■ applicable	Heavy cut, unstable machining		

CERAMIC	T02020 K	SNGN	120412-GP	RE 1.2	Roughing a_p ▸ **>1.00** f_z ▸ 0.15 **0.20** 0.25		●	●															
		SNMN	120416-GP	RE 1.6	Roughing a_p ▸ **>1.00** f_z ▸ 0.15 **0.20** 0.25		●																
	T02020 K **only for 75°** milling cutter	SNXN	1204EN	BS 1.4	Finishing a_p ▸ **<1.00** f_z ▸ 0.05 **0.10** 0.15	○																	
					Roughing a_p ▸ **>1.00** f_z ▸ 0.10 **0.20** 0.30		●																
	T02020 K **only for 88°** milling cutter	SNXN	1204HN	BS 1.8	Finishing a_p ▸ **<1.00** f_z ▸ 0.06 **0.08** 0.10	○																	
					Roughing a_p ▸ **>1.00** f_z ▸ 0.10 **0.15** 0.20		●																
	S02020 K chip breaker, low cutting force	SNGX	120412-GS	RE 1.2	Roughing a_p ▸ **>1.00** f_z ▸ 0.10 **0.15** 0.20		●																
PCBN	UE K solid	SNGN	120412S-UE	RE 1.2	Roughing a_p ▸ **>1.00** f_z ▸ 0.15 **0.20** 0.25				●	●													
	EN K **only for 75°** milling cutter	SNXN	1204EN	BS 1.4	Finishing a_p ▸ **<1.00** f_z ▸ 0.05 **0.10** 0.15				●														
					Roughing a_p ▸ **>1.00** f_z ▸ 0.10 **0.20** 0.30																		
	HN K **only for 88°** milling cutter	SNXN	1204HN	BS 1.8	Finishing a_p ▸ **<1.00** f_z ▸ 0.06 **0.08** 0.10				●														
					Roughing a_p ▸ **>1.00** f_z ▸ 0.10 **0.15** 0.20																		

● stock standard

ARBOR

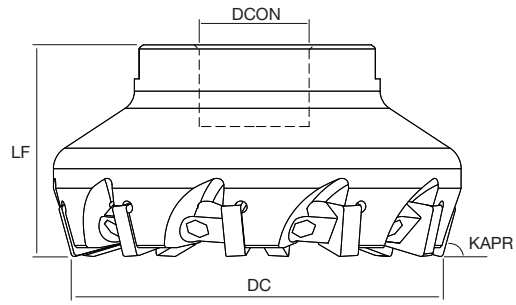

FACING

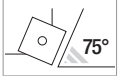

K

ARBOR

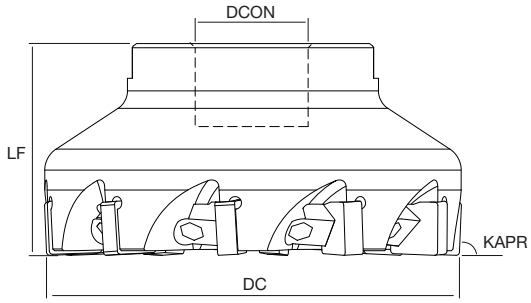

FACING

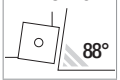

K

SQUARE ADVANCED
(KAPR 75° and 88°)

				DC	Z	DCON	LF	KG	MIID		
75°	NT-SN12-75°	D050-F22-Z5	●	50	5	22	40	0.50	SNGN12 SNGX12 SNMN12 SNXN12		
		D063-F22-Z6	●	63	6	22	40	0.70			
		D080-F27-Z8	●	80	8	27	50	1.40			
		D100-F32-Z10	●	100	10	32	50	1.80			
		D125-F40-Z12	●	125	12	40	63	4.00			
88°	NT-SN12-88°	D063-F22-Z6	●	63	6	22	40	0.70	SNGN12 SNGX12 SNMN12 SNXN12		
		D080-F27-Z8	●	80	8	27	50	1.40			
		D100-F32-Z10	●	100	10	32	50	1.80			
		D125-F40-Z12	●	125	12	40	63	4.00			

● stock standard

Spare Parts	WEDGE	WEDGE SCREW	WRENCH
NT-SN12 D□□□	NT-WD070	NT-SC060	NT-WR030

nikkoTOOLS

SP

CERAMIC
Tangential

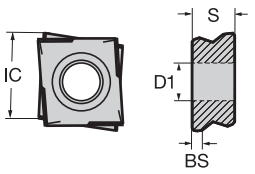

8 edges

Size	IC	S	D1		ISO513	CN NSN350	CN NSN400
12	11.70	5.50	5.10		P		
					M		
					K	600 1200	600 1200
					N		
					S		
					H		

GRADE APPLICATION AREA	Light cut, stable machining	Hardness + / –	Toughness – / +		
main application	Variable condition, general machining				
applicable	Heavy cut, unstable machining				

CERAMIC					NSN350	NSN400
GP K	SPHX 1205PCTR-GP	BS 0.7	Finishing a_p ▸ **<1.00**; f_z ▸ 0.08 **0.15** 0.22		●	●
			Roughing a_p ▸ **>1.00**; f_z ▸ 0.10 **0.20** 0.30			

● stock standard

ARBOR

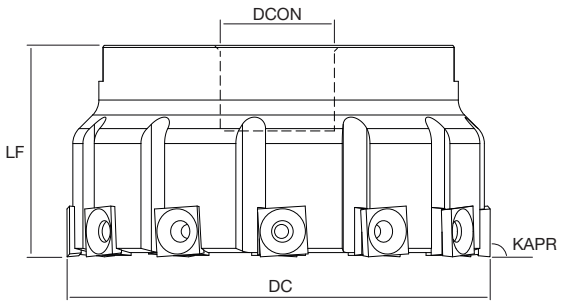

TANGENTIAL

90°

K

TANGENTIAL ADVANCED
(KAPR 90°)

				DC	Z	DCON	LF	KG	MIID		
ARBOR	NT-SP12-TAN	D050-F22-Z5	●	50	5	22	50	0.40	SPHX12		
		D063-F22-Z7	●	63	7	22	50	0.60			
		D080-F27-Z8	●	80	8	27	50	1.20			
		D100-F32-Z12	●	100	12	32	50	2.00			
		D125-F40-Z15	●	125	15	40	50	3.40			

● stock standard

Spare Parts	INSERT SCREW	INSERT WRENCH
NT-SP12 D□□□	NT-ST027	NT-FTB15

XP

DIAMOND - PCBN
Positive

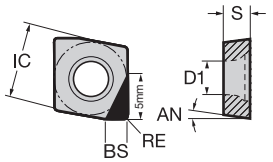

DIAMOND 1 edge - PCBN 2 edges

Size	IC	S	D1	AN
08	7.91	2.38	3.60	11°

ISO513	DP ND120	DP ND150	BH NBH450U
P			
M			
K			600 1000
N	500 2000	500 2500	
S			
H			80 200

GRADE APPLICATION AREA		Hardness	Toughness
	Light cut, stable machining	+	–
main application	Variable condition, general machining		
applicable	Heavy cut, unstable machining	–	+

DIAMOND	SLANT TIP N tip with carbide backed, tip angle: 3°	XPGT	080204F-1C	RE 0.4 BS 2.5	a_p ▸ f_z ▸	0.50 0.05	**2.00** **0.15**	3.50 0.25	●	●	
			080208F-1C	RE 0.8 BS 2.5	a_p ▸ f_z ▸	0.50 0.05	**2.00** **0.15**	3.50 0.25	●	●	
PCBN	FLAT TIP K 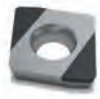 tip with carbide backed	XPGW	080204S-UE-2C	RE 0.4 BS 2.5	a_p ▸ f_z ▸	0.50 0.05	**1.00** **0.10**	1.50 0.15			●
			080208S-UE-2C	RE 0.8 BS 2.5	a_p ▸ f_z ▸	0.50 0.05	**1.00** **0.10**	1.50 0.15			●

● stock standard

nikkoTOOLS

ARBOR

STEEL BODY

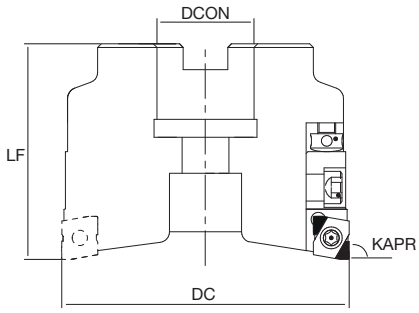

FACING

90°

K

ARBOR

ALUMINIUM BODY

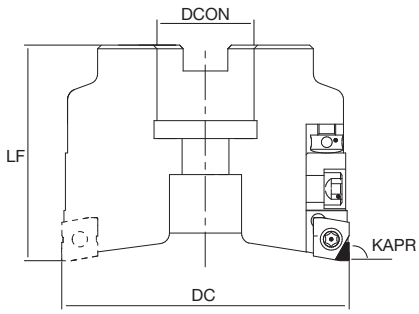

FACING

90°

N

ADJUSTABLE ADVANCED
(KAPR 90°)

				DC	Z	DCON	LF	KG	MIID		
STEEL BODY	NT-XP08	D050-F16-Z5-ST	●	50	5	16	50		XPGW08		
		D063-F22-Z6-ST	●	63	6	22	50				
		D080-F27-Z7-ST	●	80	7	27	50				
		D100-F32-Z8-ST	●	100	8	32	50				
ALU BODY	NT-XP08	D063-F22-Z5-AL	●	63	5	22	50		XPGT08		
		D080-F27-Z7-AL	●	80	7	27	50				
		D100-F32-Z8-AL	●	100	8	32	50				
		D125-F40-Z10-AL	●	125	10	40	63				

● stock standard

Spare Parts	CARTRIDGE	CARTRIDGE SCREW	CARTRIDGE WRENCH	ADJUSTING SCREW	CHIP COVER	COVER SCREW	INSERT SCREW	INSERT WRENCH
NT-XP08 D□□□-F□□-Z□□-ST	NT-CRD-XP08	NT-CW040	NT-WR040	NT-AD040	-	-	NT-ST075	NT-FTB09
NT-XP08 D□□□-F□□-Z□□-AL					NT-CH030	NT-ST064		